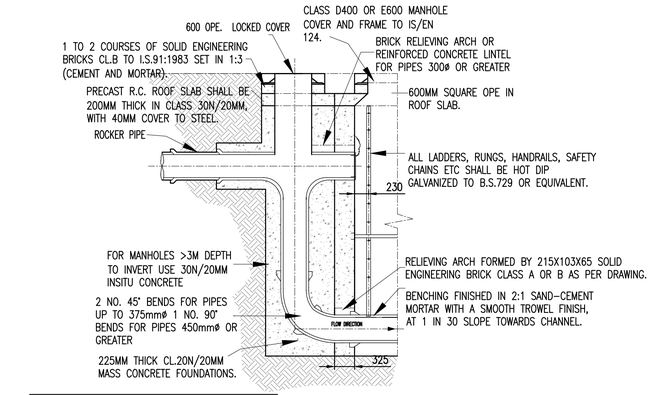

BACKDROP MANHOLE DETAILS FOR PIPE DIAM'S. 225, 300, 375, 450, 525, 600, 750MM DROP > 750MM.

TYPICAL BACKDROP DETAIL

SCALE 1:50

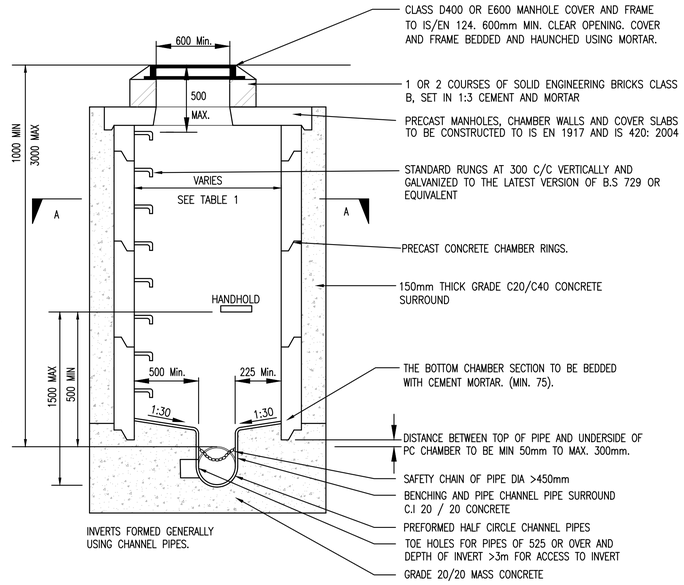

INTEGRAL INSITU GRADE 20N/20mm CONCRETE BASE WALLS, BENCHING AND BASE SLAB WITH PRECAST CHANNEL AS SHOWN OR IN–SITU FORMED INVERT AS ALTERNATIVE. WALLS TO EXTEND 150mm BEYOND OUTER FACE OF CHAMBER RING. ALTERNATIVELY PRECAST CONCRETE CHAMBER RINGS MAY BE BEDDED IN MORTAR OR AN IN–SITU 20N/20mm CONCRETE BASE SLAB 300mm GREATER IN DIAMETER THAN CHAMBER RINGS.

PRECAST CONCRETE RING MANHOLE DETAIL TYPE J (GDSDS)

SCALE 1:25

TABLE 1

MAX. PIPE DIA. (mm)	CHAMBER INTERNAL DIA. (mm)
225–600	1200
675–750	1350
900	1500
1050–1200	2100

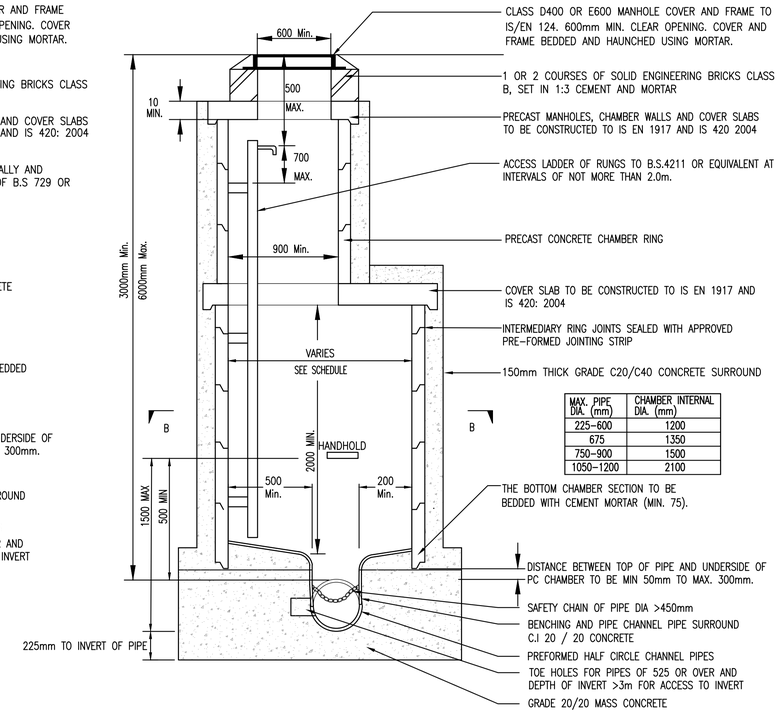

MAX. PIPE DIA. (mm)	CHAMBER INTERNAL DIA. (mm)
225–600	1200
675	1350
750–900	1500
1050–1200	2100

INSITU GRADE 20N/20mm CONCRETE BASE WALLS, BENCHING AND BASE SLAB WITH PRECAST CHANNEL AS SHOWN OR IN–SITU FORMED INVERT AS ALTERNATIVE. WALLS TO EXTEND 150mm BEYOND OUTER FACE OF CHAMBER RING. ALTERNATIVELY PRECAST CONCRETE CHAMBER RINGS MAY BE BEDDED IN MORTAR OR AN IN–SITU 20N/20mm CONCRETE BASE SLAB 300mm GREATER IN DIAMETER THAN CHAMBER RINGS.

PRECAST CONCRETE RING MANHOLE TYPE K

SCALE 1:25

NOTES:

1. DO NOT SCALE. USE FIGURED DIMENSIONS ONLY.
2. THIS DRAWING IS TO BE READ IN CONJUNCTION WITH ALL OTHER RELEVANT ARCHITECTURAL AND ENGINEERING DRAWINGS.
3. TYPE A GRANULAR FILL SHALL CONSIST OF WASHED PEA GRAVEL. ALL MATERIAL SHALL PASS A 19mm B.S. SIEVE TEST AND SHALL BE RETAINED BY A 4.75mm B.S. SIEVE TEST.
4. SELECTED FILL SHALL BE FREE FROM STONES GREATER THAN 25mm IN SIZE, BUILDERS RUBBLE VEGETABLE MATTER AND LUMPS OF CLAY GREATER THAN 75mm IN SIZE AND SHALL BE COMPACTED IN 150mm LAYERS.
5. IN OPEN SPACES BACKFILL SHALL CONSIST OF SUITABLE SELECTED EXCAVATED MATERIAL. UNDER PAVED AREAS BACKFILL SHALL CONSIST OF SUITABLE APPROVED GRANULAR FILL. GENERAL BACKFILL SHALL BE COMPACTED IN LAYERS NOT EXCEEDING 300mm THICK.
6. CONCRETE BED AND SURROUND SHALL BE USED ON ALL PIPES WHERE COVER TO THE SOFFIT OF THE PIPE IS LESS THAN 1.2m IN ROADS, FOOTPATHS AND GRASS MARGINS AND 0.9m IN OPEN SPACES AND FIELDS.
7. ALL CONCRETE FOR PIPE BEDDING, HAUNCHING AND SURROUNDS SHALL BE GRADE 20N/20.
8. ALL MANHOLES SHALL BE WATERTIGHT TO THE SATISFACTION OF THE ENGINEER.
9. FORMWORK TO REINFORCED CONCRETE AND MASS CONCRETE SHALL BE CLASS F2.
10. CLASS U2 FINISH TO THE TOP OF SLABS. REINFORCEMENT TO SLABS TO ENGINEERS DETAILS.
11. 200mm THICK CL. 30/20 MASS CONCRETE FOUNDATIONS. 225 THICK PRECAST R.C. ROOF SLAB IN CL 30/20 CONCRETE. COVER TO STEEL TO BE 40mm.
12. TOE HOLES TO BE PROVIDED IN BENCHING OF SEWERS GREATER THAN 450mm DIAMETER FOR ACCESS TO INVERT. SAFETY CHAIN ON SEWERS 600mm. DIAM. OR GREATER MILD STEEL SAFETY CHAIN SHALL BE 10MM. NOMINAL SIZE GRADE M(H) NON CALIBRATED CHAIN, TYPE 1, COMPLYING WITH BS4942 PART 2.
13. WHEN DEPTH OF MANHOLES TO INVERT IS GREATER THAN 3.5m, LADDERS SHALL BE USED INSTEAD OF RUNGS. FIXED LADDERS SHOULD MEET THE DIMENSIONAL REQUIREMENTS OF BS4211 EXCEPT THAT STRINGERS SHOULD NOT BE LESS THAN 65 X 20mm IN SECTION AND RUNGS 25mm IN DIAMETER.
14. LADDER STRINGERS SHOULD BE ADEQUATELY SUPPORTED FROM THE MANHOLE WALL AT INTERVALS OF NOT MORE THAN 3.0m STRINGERS SHOULD BE BOLTED TO CLEATS TO FACILITATE RENEWAL.
15. ALL LADDERS, RUNGS, HANDRAILS, SAFETY CHAIN, ETC. SHALL BE HOT DIPPED GALVANISED TO BS729.
16. ALL WORKS TO BE CARRIED OUT IN ACCORDANCE WITH THE REQUIREMENTS OF LOCAL COUNTY COUNCIL.

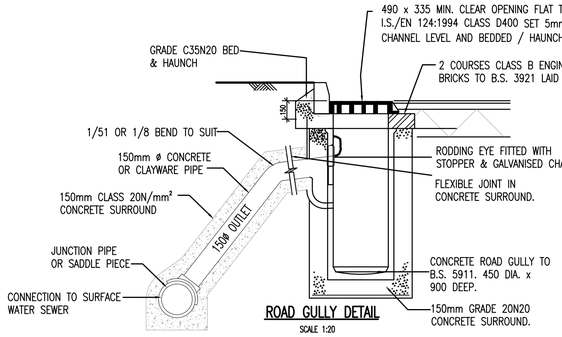

ROAD GULLY DETAIL

SCALE 1:20

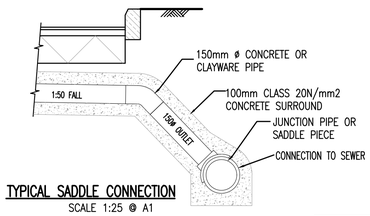

TYPICAL SADDLE CONNECTION

SCALE 1:25 @ A1

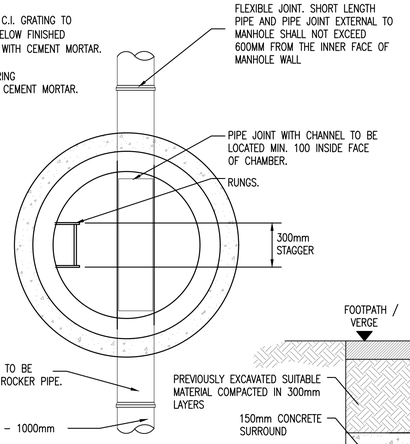

SECTION A–A

SCALE 1:25

PIPE DIAMETER	ROCKER PIPE LENGTH
150 – 450	0.5 – 0.75
451 – 750	0.75 – 1.0
750 >	SEEK GUIDANCE

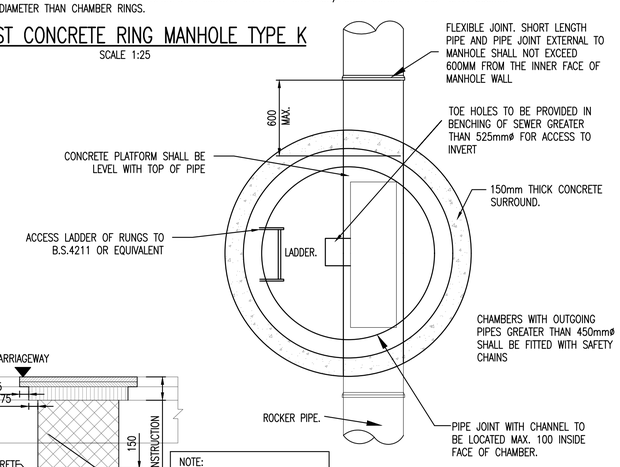

SECTION B–B

SCALE 1:25

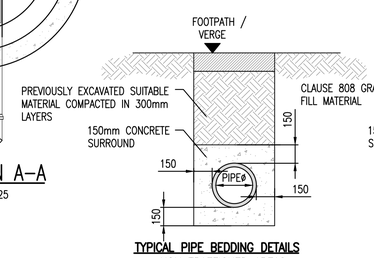

TYPICAL PIPE BEDDING DETAILS NON TRAFFICKED AREAS LESS THAN 900mm TO PIPE CROWN

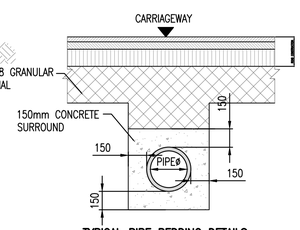

TYPICAL PIPE BEDDING DETAILS TRAFFICKED AREAS LESS THAN 1200mm TO PIPE CROWN

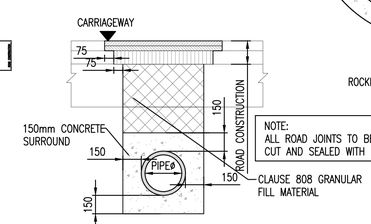

NOTE:
ALL ROAD JOINTS TO BE SAW CUT AND SEALED WITH BITUMEN

TYPICAL PIPE BEDDING AND REINSTATEMENT DETAILS TRAFFICKED AREAS (ROADWAY) LESS THAN 1200mm TO PIPE CROWN

SCALE 1:25

NORMAL INTERNAL DIAMETER	MINIMUM TRENCH WIDTH mm	MAXIMUM TRENCH WIDTH mm
100	450	650
150	500	700
225	600	800
300	700	900
375	950	1150
450	1050	1250
525	1150	1350
600	1250	1450
675	1350	1550
750	1400	1600
825	1500	1700
900	1950	2150
1050	2100	2300
1200	2300	2500
ABOVE 1200	PIPE DIAMETER PLUS 800mm	OUTSIDE DIAMETER PLUS 1000mm

MAXIMUM AND MINIMUM TRENCH WIDTHS

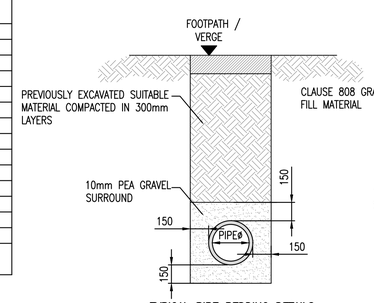

TYPICAL PIPE BEDDING DETAILS NON TRAFFICKED AREAS GREATER THAN 900mm TO PIPE CROWN

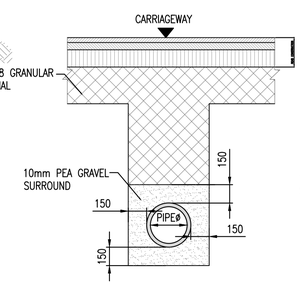

TYPICAL PIPE BEDDING DETAILS TRAFFICKED AREAS GREATER THAN 1200mm TO PIPE CROWN

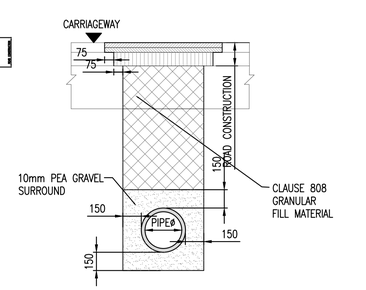

TYPICAL PIPE BEDDING AND REINSTATEMENT DETAILS TRAFFICKED AREAS (ROADWAY)

1:25 0 0.5 1.0 1.5 2.0 2.5m

1:1 0 10 20 30 40 50 60 70 80 90 100m

REV.	DATE	AMENDMENT	DRN	APPD
—	31/05/23	ISSUED FOR PLANNING	MS	IW

STATUS **FOR PLANNING ONLY. NOT FOR CONSTRUCTION**

Waterman Moylan
Engineering Consultants
BLOCK S, EASTPOINT BUSINESS PARK, ALFIE BYRNE ROAD, DUBLIN D03 H3F4 IRELAND.
Tel: (01) 664 8900 Fax: (01) 661 3618
Email: info@waterman-moylan.ie www.waterman-moylan.ie

CLIENT FINGAL COUNTY COUNCIL

ARCHITECT WALSH & ASSOCIATES

PROJECT CHURCH FIELDS EAST

TITLE PROPOSED PUBLIC SURFACE WATER DRAINAGE DETAILS

DRAWN	DESIGNED	APPROVED	DATE
MS	NM	IW	MAY 2023

SCALE	JOB NO.	DRG. NO.	REVISION
A1 @ 1:25	20–074	P4213	

© 2017. This drawing is copyright. No part of this document may be re-produced or transmitted in any form or stored in any retrieval system of any nature without the written permission of the consulting engineer as copyright holder except as agreed for use on the project for which the document was originally issued.