NOTE :

THE USE OF THIS DETAIL ASSUMES

1. THE GROUNDWATER TABLE IS BELOW THE BASE OF THE MANHOLE.

CONTRACTOR TO ADVISE ENGINEER WHERE THE WATER TABLE LEVEL IS HIGHER THAN THE BASE OF MANHOLE

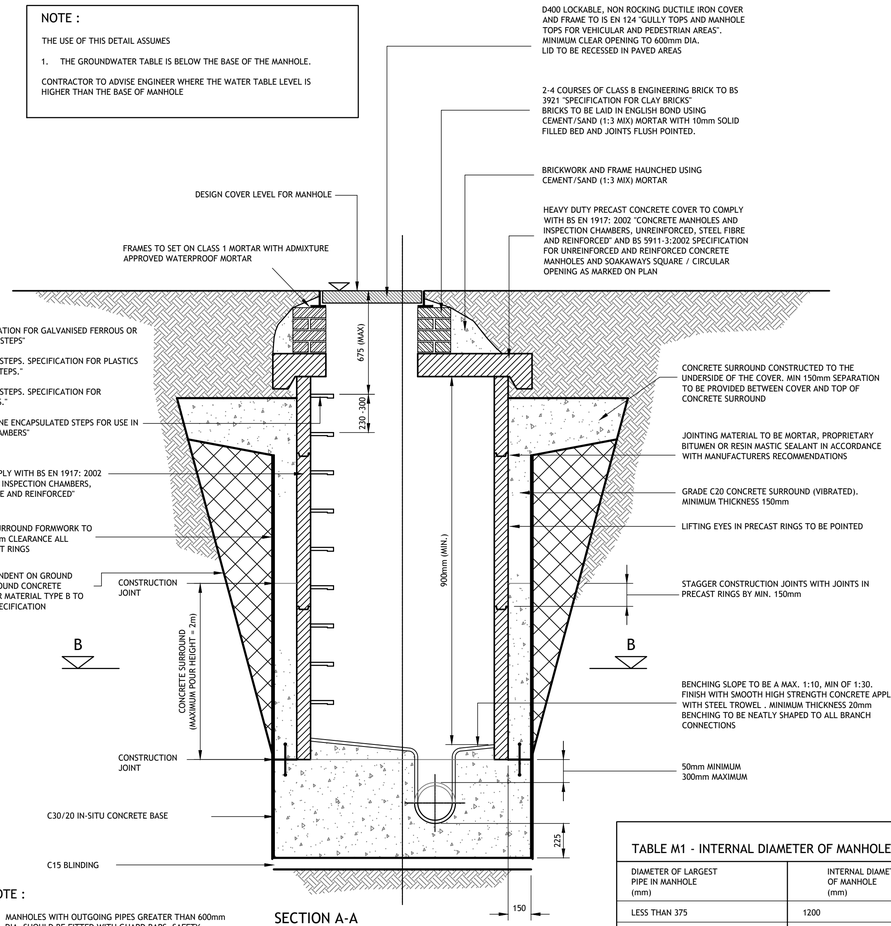

SECTION A-A
SCALE 1:20

NOTE :

1. MANHOLES WITH OUTGOING PIPES GREATER THAN 600mm DIA. SHOULD BE FITTED WITH GUARD BARS, SAFETY CHAINS OR OTHER SAFETY DEVICES.
2. FOR DEPTHS TO INVERT >2.700m AN ACCESS SHAFT OF MIN. 900mm DIAMETER AND REDUCING SLAB MAY BE USED.
3. WHERE THE DEPTH TO INVERT IS 1.00m OR LESS A 450mm x 450mm (OR 450mm DIA.) INSPECTION CHAMBER WITH MINIMUM COVER SIZES OF 450mm DIA. MAY BE USED SUBJECT TO ACCOMMODATION OF CONNECTIONS AND APPROVAL OF THE LOCAL AUTHORITY.
4. ON COMPLETION OF CONSTRUCTION INTERNAL SURFACES OF MANHOLE & SEWERS TO THOROUGHLY CLEANSED TO REMOVE ALL DELETERIOUS MATERIAL, WITHOUT SUCH MATTER BEING PASSED FORWARD INTO PUBLIC SEWERS OR WATERCOURSES
5. FIRST MANHOLE UPSTREAM FROM CONNECTION TO THE (EXISTING) PUBLIC SEWER TO BE FITTED WITH A SCREEN IN ORDER TO PREVENT DEBRIS ENTERING THE PUBLIC SEWER. THE SCREEN NOT TO BE REMOVED UNTIL IMMEDIATELY PRIOR TO OCCUPATION OF PREMISES TO BE SERVED BY SEWER.

TABLE M1 - INTERNAL DIAMETER OF MANHOLES

DIAMETER OF LARGEST PIPE IN MANHOLE (mm)	INTERNAL DIAMETER OF MANHOLE (mm)
LESS THAN 375	1200
375 - 450	1350
750 - 900	1800
> 900	CONSULT LOCAL AUTHORITY

NOTE :

USE 1050 DIAMETER RINGS FOR PIPES LESS THAN 375mm DIAMETER WHERE DEPTH TO SOFFIT IS 1.35 - 1.5m

TABLE M2 - ROCKER PIPE LENGTH

NOMINAL PIPE DIAMETER (mm)	EFFECTIVE LENGTH (M)
150 to 600	0.6
675 to 750	1.0
Over 750	1.2

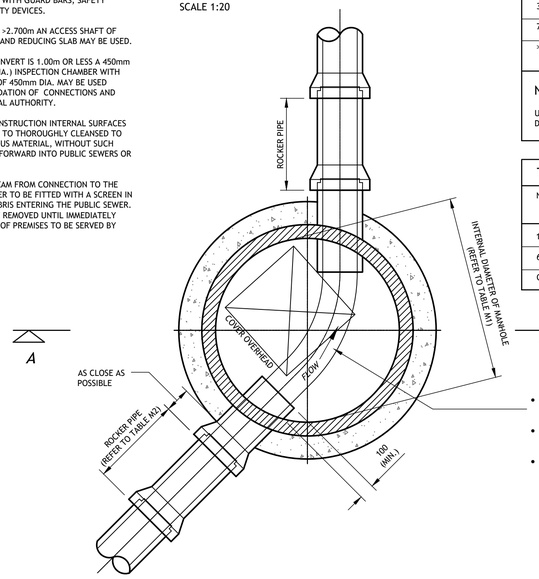

- MANHOLE COVER TO BE HINGED AT RIGHT ANGLES TO KERBLINE SO THAT THEY CLOSE IN DIRECTION OF TRAFFIC.
- MANHOLE COVERS ON ROADS SHOULD BE LOCATED IN THE MIDDLE OF TRAFFICKED LANES INSIDE WHEEL TRACKS
- COVER AND FRAME TO BE INSTALLED SO THAT NO PART OF THE UNIT IS RAISED OR SUNKEN IN A WAY THAT COULD CAUSE A HAZARD TO PEDESTRIAN OR VEHICULAR TRAFFIC

SECTION B-B
SCALE 1:20

1.TYPICAL PRECAST CONCRETE MANHOLE
SCALE 1:20

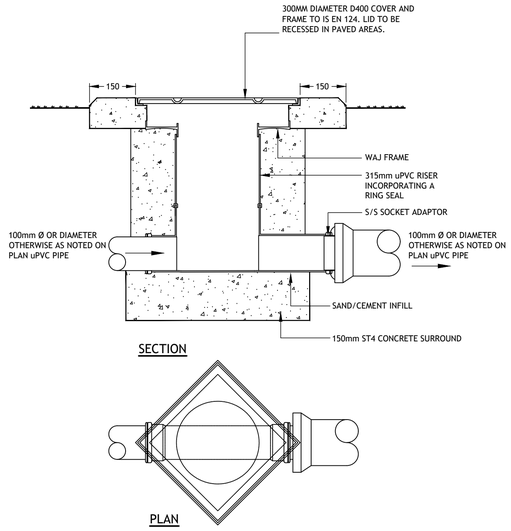

2. ACCESS JUNCTION DETAIL
SCALE: 1:10

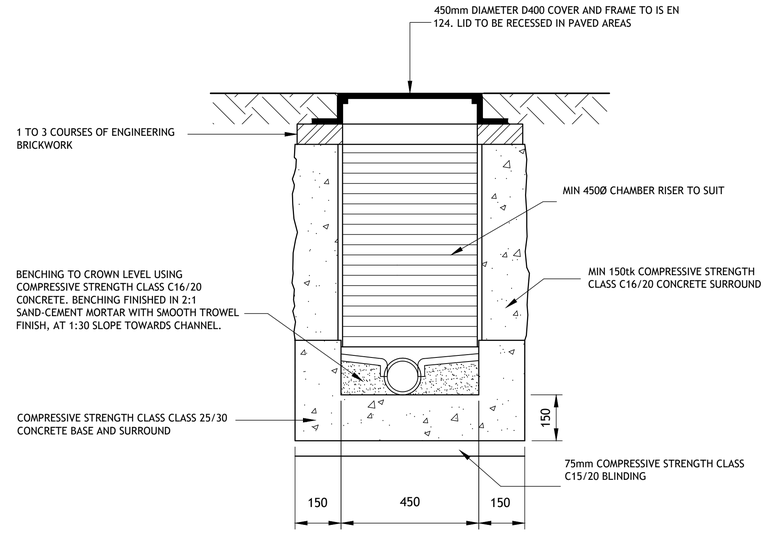

SECTION A-A

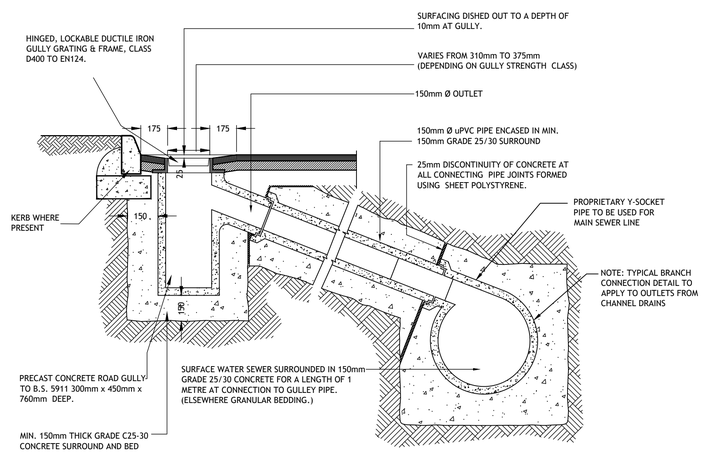

FOR STRENGTH CLASS OF GULLY REFER TO EN 124 : 2015, CLAUSE 5

NOTE 1 : PLACE OF INSTALLATION & FIGURES 9A AND 9B PROPRIETARY FITTINGS TO BE USED ON ALL PIPEWORK CONNECTIONS

NOTE 2 :
GROUP 1 - MIN. CLASS A15 GROUP 4 - MIN. CLASS D400
GROUP 2 - MIN. CLASS B125 GROUP 5 - MIN. CLASS E600
GROUP 3 - MIN. CLASS C250 GROUP 6 - MIN. CLASS F900

3. PRECAST CONCRETE GULLY IN NATURAL STONE AREA
SCALE 1:20

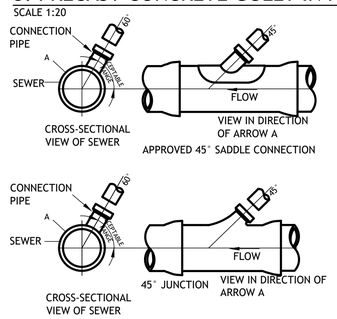

4. TYPICAL SEWER / SERVICE PIPE CONNECTION
SCALE 1:10

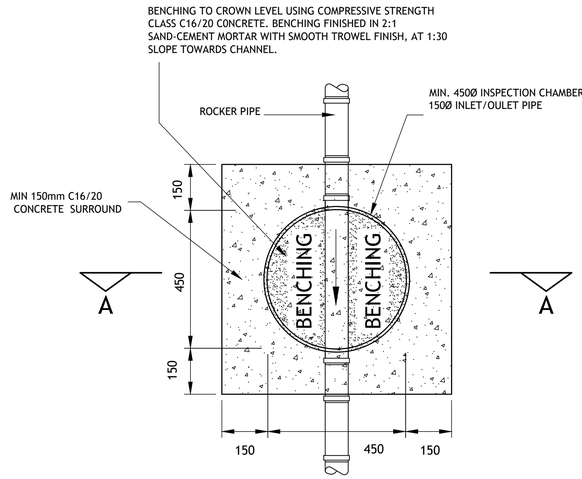

INSPECTION CHAMBER BASE

5. INSPECTION CHAMBER UP TO 1.0m DEEP
SCALE 1:10

© PUNCH Consulting Engineers
This drawing and any design hereon is the copyright of the Consultants and must not be reproduced without their written consent.
All drawings remain the property of the Consultants.
Figured dimension only to be taken from this drawing.
Consultants to be informed immediately of any discrepancies before work proceeds.
COLOUR DRAWING

Rev	Amendment	By	Date	Rev	Amendment	By	Date
C01	PLANNING ISSUE	PF	2023-04-06				

Client: Fingal County Council

PUNCH consulting engineers
Dublin | Limerick | Cork | Galway | Glasgow
Carnegie House Library Road,
Dun Laoghaire, Co. Dublin, A96 C7W7
t +353 1 271 2200 | w punchconsulting.com

Project: PUBLIC REALM IMPROVEMENTS FOR A PEDESTRIANISED NEW STREET			
Title: DRAINAGE DETAILS - SHEET 1			
Drawn: DAP	Date drawn: APRIL 2023	Technician Check: DAP	Engineer Check: MCD	Approved: MCD
Project No: 222126	Model Ref: 222126-PUNCH-XX-XX-M2-C-0500-0503	Drawing Status: A01	
Scale @ A1: AS INDICATED	Document No: 222126-PUNCH-XX-XX-DR-C-0500	Revision No: C01	