Professional
Consulting Tree Service

Unit 1A, Crossagalla Enterprise Centre,
Ballysimon Rd., Limerick.
Telephone: (086) 3082808
info@arborcare.ie
www.arborcare.ie

Arboricultural Impact Assessment Report

Assessment of trees in relation to the Proposed development

Prepared for:

JBA Consulting for Fingal County Council

Proposed site:

Hayestown Rush, Old Road, Co. Dublin

Prepared by:

Michael Garry, BSc. *Arb*. Dip *Arb* M.*ArborA,* Pgrad *Ecology* (UCC),

Arbor-Care (Ltd) Professional Consulting Tree Service,
Unit 1A, Crossagalla Enterprise Centre,
Ballysimon Rd., Limerick.

Telephone: (086) 3082808
info@arborcare.ie
www.arborcare.ie

Executive Summary

Arbor-Care Ltd (Professional Consulting Tree Service) was retained by JBA Consulting to undertake firstly, a Tree Survey, tree protection plan and arboricultural impact assessment outlining existing trees on or adjacent to the proposed development. The surveyed trees contained within this report are located within the parameters of the proposed site. The proposed site consists of a large green field site.. The survey commenced along the southern boundary and continue in a northern direction.
The objective of the tree survey was to identify the areas that contained trees or hedgerows of quality, and to ensure where possible that these areas would be retained.

The Tree Survey and inventory report is based on the British standard *BS 5837:2012 Trees in relation to design, demolition and construction*. *Recommendations,* this standard gives recommendations and guidance on the principles to be applied to achieve a satisfactory juxtaposition of trees, including shrubs, hedges and hedgerows, with structures. It sets out to assist those concerned with trees in relation to construction to form balanced judgements.
The survey commenced on the 21st July 2020.

The objective of the tree survey was to identify the areas that contained trees or hedgerows of quality, and to ensure where possible that these areas would be retained. This Tree Survey report will be accompanied by an inventory of trees and a tree protection plan (Appendix 3).
The Arboricultural Impact Assessment and a tree protection plan was prepared for the site identifying trees that may be impacted on by the proposed development based on the proposed design.

Fig. 1 *Survey area, highlighted in red*

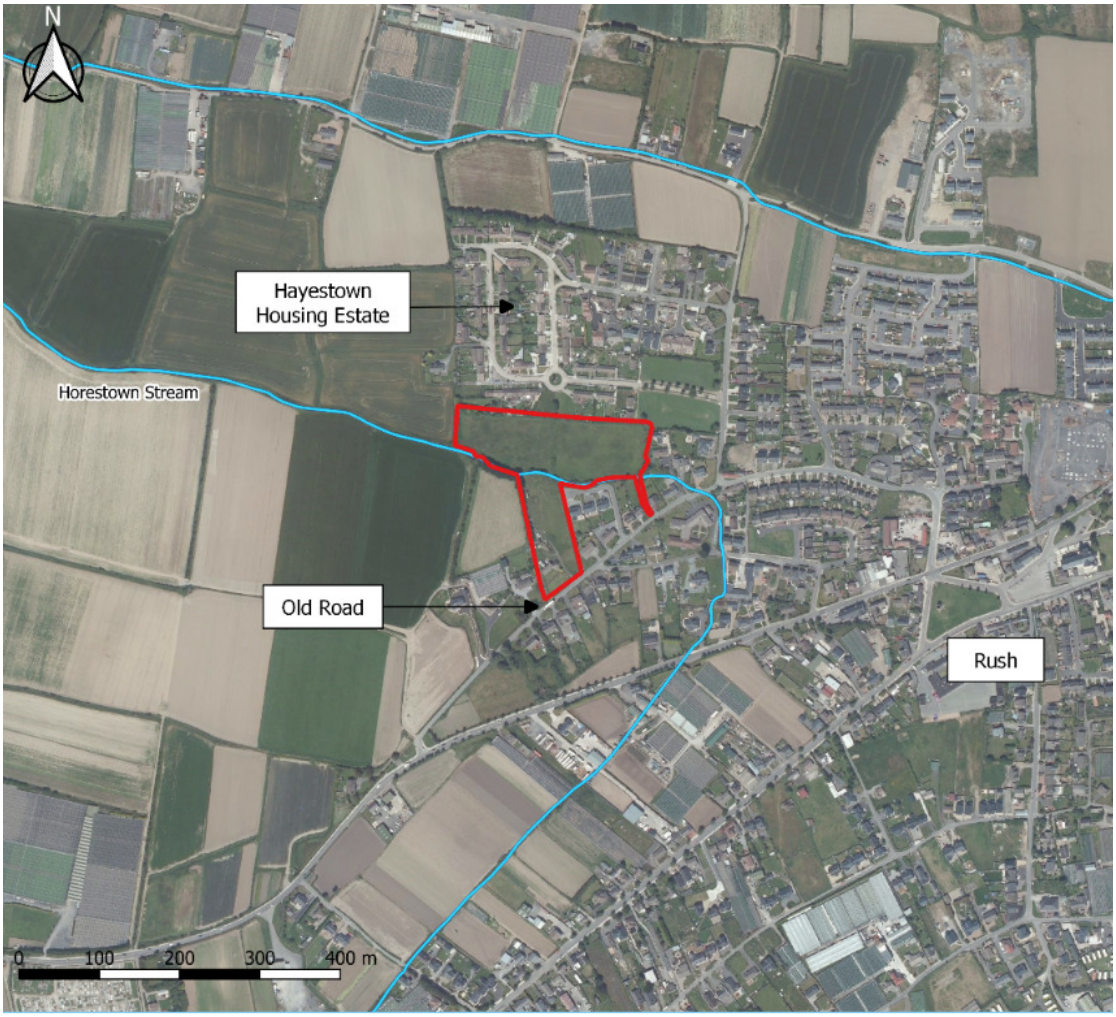

Proposed development

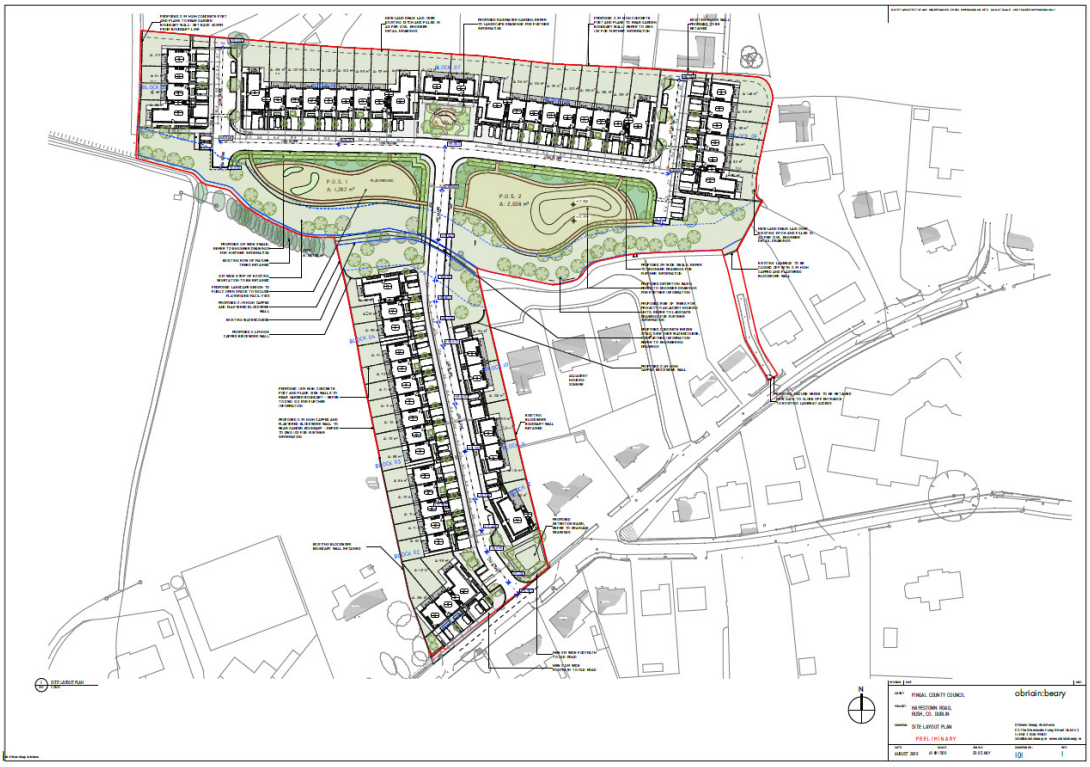

1.0 Assignment

1. To undertake a visual tree/hedgerow survey to assess the tree's condition(s) and provide an inventory of trees.
2. Provide a table outlining the schedule of trees on site and provide recommendations for their preservation and/or removal.
3. Present a written report on the inspection of the trees.

1.1 Limits of the Assignment

Unless otherwise stated tree inspections have been undertaken from ground level and using non-invasive techniques only. Comments on the condition and safety of any tree relate to the condition of that tree at the time of the survey. It should be recognised that tree condition is subject to change due to, for example the effects of disease, wind or nearby development works. Changes in land use are also significant in respect of risk assessment. Trees should therefore be inspected at intervals relative to identified site risks.

2.0 Methodology Employed

An initial tree survey and visual condition assessment was on the 21st July 2020. The purpose of this report and in accordance with *BS 5837: 2012 Trees in relation to design, demolition and construction*. *Recommendations* only trees with diameters of 75mm or greater were surveyed, Also in accordance with section 4.4.2.3 of the British standard document where trees formed obvious groups these were assessed and recorded as groups. The survey commenced along the northern boundary and continued in an easterly direction

Section 4.4.2.3 of BS 5837: 2012 states:

Trees growing as groups or woodland should be identified and assessed as such where the arboriculturist determines that this is appropriate. However, an assessment of individuals within any group should still be undertaken if there is a need to differentiate between them, e.g. in order to highlight significant variation in attributes (including physiological or structural condition).

NOTE: The term "group" is intended to identify trees that form cohesive arboricultural features either aerodynamically (e.g. trees that provide companion shelter), visually (e.g. avenues or screens) or culturally, including for biodiversity (e.g. parkland or wood pasture), in respect of each of the three subcategories.

The survey concentrated primarily on the significant trees/hedgerows located within and adjacent to the proposed development area. The objective of this survey was to gather information regarding the trees location on the proposed development site and the impact the proposed development may have on the trees. **Please refer to appendix 1 for the tree inventory**.

Significant trees can be equated as those trees whose visual importance to the surrounding area are sufficient to justify special efforts to protect/preserve and whose loss would have an irremediable adverse impact on the local environment. Significance can also be placed depending on the trees age, another variable to imply significance can be the aesthetic merit of the tree based on its unusual size, intrinsic physical features or outstanding appearance or occurring in a unique location or context, and thus provides a special contribution as a landmark or landscape feature.

All above parts of the trees were visually examined. Tree diameters (DBH) were estimated at 1.5 meter above grade as per standard arboricultural practice. Tree height was measured

with the use of a clinometer (Where practical). A generalised system was employed to describe the overall health of the trees. The system uses a five tier rating scale with the following descriptors:

Specimen condition 5-tier rating system

1. Very poor-1-20%
2. Poor- 21-40%
3. Fair- 41-60%
4. Good- 61-80%
5. Very good 81-100%

3.0 Trees surveyed

The survey commenced on the 21st July 2020. A total of 51 trees were surveyed. The impact of the development on the trees surveyed will be assessed in the Arboricultural Impact Assessment.

3.1 A breakdown of the Tree Categories on site as per BS 5837 2012 is set out in the table below:

Category	Quantity
A-Tree of high quality	24
B-trees of good quality	25
C (Low quality or trees less than 75mm diameter)	2
U (remove due to poor condition)	0
Total Trees surveyed	51

4.0 Arboricultural Impact of the Proposed Development.

4.1 Trees to be removed to facilitate the works

The arboricultural impact of the proposed development on the site will initially be low. It is anticipated to remove 23 out of 51 trees surveyed in order to accommodate the development. It must be stated that 12 of these are a group of semi-mature alders that have been planted as a group. All the trees of quality will be retained.

Of the 23 trees to be removed to accommodate the proposed design, these consist of 0 no. Category A tree, 21 no. Category B and 2 no. Category C trees and 0 no. category U trees.

In accordance with *BS 5837: 2012 Trees in relation to design, demolition and construction-Recommendations.,* Category B signifies those trees *of a "moderate value and in such a condition as to be able to make a substantial contribution (A minimum life expectancy of 20 yrs is suggested*)..".Category C signifies those trees/hedgerows *of "a low quality and value that are currently in an adequate condition to remain until new planting could be established (A minimum life expectancy of 10yrs is suggested*)." *Category U signifies those trees that are in such a condition that any existing value would be lost within 10 years and which should, in the current context, be removed for reasons of sound arboricultural management*

Table 1: Schedule of trees to be <u>removed</u> to accommodate the design (To be read in conjunction with Appendix 1

Tree number	Species	Age Class	Tree category
5436	Sycamore	Mature	B2
5437	Sycamore	Semi-mature	C2
5438	Sycamore	Mature	B2
5439	Hawthorn	Young	C2
5440	Sycamore	Mature	B2
T1	Alder	Mature	B2
T2	Alder	Mature	B2
T3	Willow	Mature	B2
T4	Sycamore	Early-mature	B2
T5	Sycamore	Early-mature	B2
T6	Willow	Mature	B2
Group 1 x 12	Alder	Semi-mature	B2

5.0 Tree Removal

All trees that are destined for removal shall be removed prior to any construction or demolition works on this site. Any tree remedial works that are required shall also be undertaken prior to any construction or demolition activity on the site. All the above shall be carried out by qualified and insured tree surgeons and in accordance with *BS 3998: 2010 Tree Work. Recommendations*

6.0 Tree Protection

Prior to any construction or demolition works on this site all trees destined for retention need to be protected by the use of protective barriers and or ground protection, fit for the purpose of ensuring the successful long-term preservation of the trees. In order for the retained trees to be adequately protected on the site a construction exclusion zone needs to be identified. This zone is calculated based on the root protection area (RPA), which is the minimum area in m^2 which should be left undisturbed around each retained tree. The RPA should be calculated as an area equivalent to a circle with a radius 12 times the stem diameter for a single stem tree and 10 times basal diameter measured immediately above the root flare for trees with more than one stem arising below 1.5m above ground level.

Number of Stems	**Calculation**
Single Stem Tree	RPA (m^2) = $\{\frac{\text{stem diameter (mm) @ 1.5m x 12}}{1000}\}^2 \times 3.142$
Tree with more than one Stem arising below 1.5m above Ground level	RPA (m^2) = $\{\frac{\text{Basal Dia. (mm) x 10}}{1000}\}^2 \times 3.142$

Note: The Calculated RPA should be capped to 707$m^{2,}$ e.g. which is the equivalent to a circle with a radius of 15m or a square with approximately 26 m sides.

6.1 *Protective Barriers*

Trees/hedgerows that are destined to be retained must be protected by protective fencing, signage and/or ground protection prior to any materials or machinery being brought on site and prior to any development, demolition or soil stripping takes place. Areas that are designated for new plantings should be similarly protected. Barriers should be fit for the purpose of excluding construction activity. In most cases barriers should consist of a scaffold

framework (Refer to fig. 3 below) comprising a vertical and horizontal framework, well braced to resist impacts. To ensure the protective barriers are respected, clear concise signage must be affixed to the barrier in an unrestricted easily viewed location.

The protective barriers shall remain in an undisturbed condition and only removed on completion of all construction activity finished grading and sodding. Any breech of the protective fence shall be reported to the consulting arborist.

Figure 3. Protective Barrier

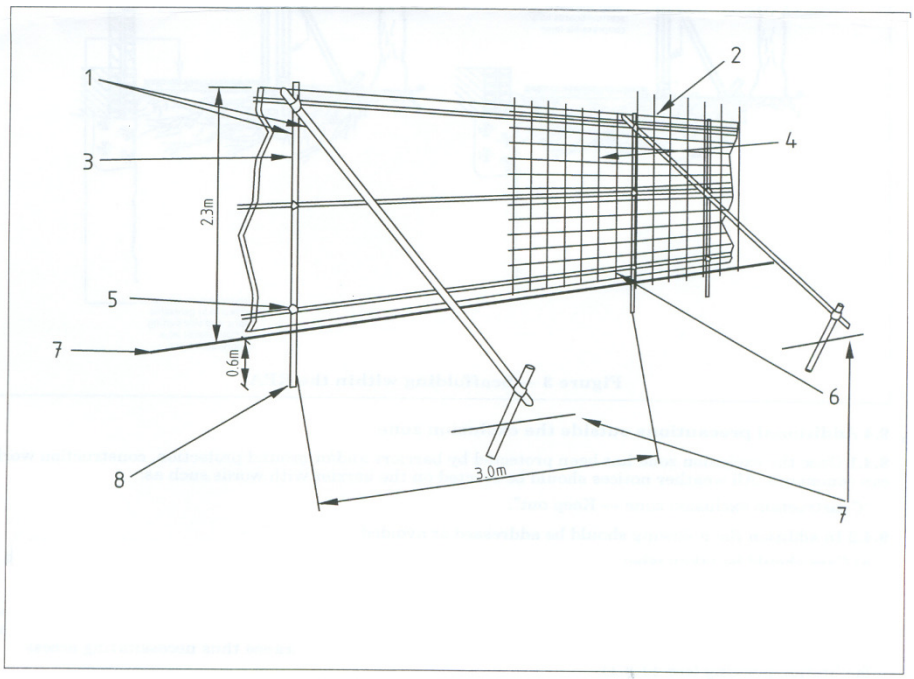

1. Standard scaffold poles

2. Uprights to be driven into the ground

3. Panels secured to uprights with wire ties and where necessary standard scaffold poles

4. Weld mesh wired to the uprights and horizontals

5. Standard clamps

6. Wire twisted and secured on the inside of fencing to avoid easy dismantling

7. Ground level

8. Approx. 0.6m driven into the ground

The above displays an example of a suitable protective barrier as recommended by *BS. 5837 2012 Trees in Relation to Construction. Recommendations.*

Figure 4. Signage to be placed on all protective fencing

The signage must state the following;

- No construction activity is to take place within the R.P.A. (unless pre-agreed with the arborist)
- No materials of any kind are to be stored within the R.P.A.
- No "Spilling out" of materials shall take place within the R.P.A.
- No fires are to be lit within the R.P.A.

6.2 *Ground Protection*

Although works within the RPA are not recommended should essentials works be required within the RPA. The installation of ground protection in the form of a single thickness of scaffold boards on top of a compressible layer laid onto a geotextile may be acceptable.

6.3 Tree Protection Plan

A site specific Tree Protection Plan has been included. See Appendix 3.

7.0 Arboricultural Method Statement/Tree Protection Strategy

The objective of this arboricultural method statement and tree protection plan is to provide information for the building contractor/site manager on how the trees on the site need to be protected pre, during and post development works so that they can prepare their own site specific detailed method statement for their works

It is necessary for the protective fencing to be erected and all other mitigation measures required to be put in place prior to any development works commencing on site to ensure all retained trees and their critical rooting zone are protected for the duration of the works. Refer to tree protection plan (Appendix 2) for the position of protective fencing and additional mitigation measures

The protection for trees shown for retention will occur in three stages known as pre, during and post development.

Table 2. Arboricultural Method Statement/Tree Protection Strategy – Management Stages

Arboricultural Method Statement/Tree Protection Strategy – Management Stages		
Stage 1 – Pre development works	**Stage 2 - The construction works stage**	**Stage 3-Post Development Works**
1. Consultation with Arborist and developer	1. Protective Fencing – management and maintenance	1. Site inspection by arborist to ensure plan adhered to and trees and hedgerow protected
2. Site meeting - consultation with Arborist, developer, main contractor and sub-contractor	2. Excavations – works only commence when protective fencing in place	
3. Tree works – Appointment of professional tree surgeon	3. Working within the RPA – All works within the RPA to be discussed and agreed with the arborist	
4. Erection of protective fencing/Mitigation measures	4. Finished ground levels/Landscaping – All works to ensure the integrity of tree/s protected.	

7.1 Stage 1 - Pre development works

Prior to works commencing on site the following needs to be agreed and implemented:

1. The developer if requested may need to appoint an arboriculturist for the duration of the project. The arborist is to make regular site visits to ensure that the protection measures are in place and are being adhered too.
2. The main contractor and sub-contractors are to be briefed on the tree protection plan and ensure all measures are kept in place for the duration of the project
3. All personnel are to adhere to the recommendations of the appointed arborist
4. Any issues in relation to trees shown for retention must be discussed with the appointed arborist and the necessary mitigation measures put in place without delay and prior to the works taking place.

7.2 Site meeting

Prior to any works on site, it may be necessary that a meeting be arranged between the project manager, site foreman, the project landscape architect, the project arborist and the local authority to identify and finalise the trees for removal and the line of protective fencing and any other mitigation measures.

7.3 Tree works

The developer or the main contractor is to appoint a professional tree surgery company to undertake any tree removal or surgery works identified. The works are to be undertaken in accordance with *BS 3998 2010.* All trees agreed to be removed are to be removed prior to works and on receipt of full planning permission

7.4 Erection of protective fencing/Mitigation measures

The erection of protective fencing is to be erected to the fence line shown in tree protection plan. The fencing must adhere with BS 5837: 2012 (Figure 3 and Figure 4 above). Signage must be placed on the fence to highlight its importance. Once the fencing is erected works can commence on-site.

8.0 Stage 2 - The construction works stage

8.1 Protective Fencing

During the course of the construction works the integrity of the fencing must be respected and remain in place at all times. No building materials or soil heaps are to be stored within this area. Should essential works need to take place with the root protection area the project arborist must be informed in advance and any mitigation measures are to be put in place. The protective fencing must remain in situ for the duration of the project and must only be removed upon completion of all works.

8.2 Excavations

Excavation works are only to commence once the protective fence line is in place. The excavations need to be viewed on site once marked out with the project manager, site foreman and the project arborist in advanced of excavation to determine the extent of the impact and the works space required to allow the construction works proceed and to assess any additional mitigation measures that may be required to protect the retained trees. In certain areas it may be necessary to use alternative methods of excavation to prevent encroachment into the RPA of the trees to be retained and this may include such methods as retaining walls, no dig technique etc.

8.3 Working within the RPA

If it becomes necessary to undertake works within the RPA of tree/trees, these must be discussed and agreed with the project arborist. All works must be carried out manually root pruning is to be undertaken by an arborist using hand held equipment such as a handsaw.

For pedestrian movements within the R.P.A. the installation of ground protection in the form of a single thickness of scaffold boards on top of a compressible layer laid onto a geotextile may be acceptable.

8.4 Finished ground levels/Landscaping

The existing ground levels within the RPA of the retained trees must be retained and incorporated into the finished landscaped development. Where changes in level occurs these are to be either graded into the finished levels starting outside the RPA or alternatively, retaining wall structures are to be used differentiating between the different levels.

All soft and hard landscaping within the RPAs must be carried out manually and the soil levels must not be lowered or raised resulting in root damage to the trees. All finished surfaces are to be porous to allow the free movement of water and gaseous exchange to the roots.

9.0 Stage 3-Post Development Works

The project is not to be considered complete until the arborist has inspected the site and is satisfied that all retained trees and hedgerows have been protected in accordance with the site specific Tree Protection Plan and there has been no negative impact on the retained trees on site as a result of the development.

10.0 Conclusion

The arboricultural impact of the proposed development on the site will initially be low. It is anticipated to remove 23 out of 51 trees surveyed in order to accommodate the development. It must be stated that 12 of these are a group of semi-mature alders that have been planted as a group. All the trees of quality will be retained.

Of the 23 trees to be removed to accommodate the proposed design, these consist of 0 no. Category A tree, 21 no. Category B and 2 no. Category C trees and 0 no. category U trees.

In accordance with *BS 5837: 2012 Trees in relation to design, demolition and construction-Recommendations.,* Category B signifies those trees *of a "moderate value and in such a condition as to be able to make a substantial contribution (A minimum life expectancy of 20 yrs is suggested*)..".Category C signifies those trees/hedgerows *of "a low quality and value that are currently in an adequate condition to remain until new planting could be established (A minimum life expectancy of 10yrs is suggested*)." *Category U signifies those trees that are in such a condition that any existing value would be lost within 10 years and which should, in the current context, be removed for reasons of sound arboricultural management*

I consider subject to implementing the above Arboricultural Method Statement/Tree Protection Strategy and landscape plan that there is unlikely to be significant long term detrimental impact as a consequence of the development proposal

Appendix 1

Tree Categorization.

Tree Categorization.

Category U
This category signifies those trees that are in such a condition that any existing value would be lost within 10 years and which should, in the current context, be removed for reasons of sound arboricultural management.

Category A.
Those trees of a high quality and value, in such a condition as to be able to make a substantial contribution. (A minimum of 40 years is suggested)

Category B
This category signifies those trees of a moderate value and in such a condition as to be able to make a substantial contribution (A minimum life expectancy of 20 yrs is suggested)

Category C
This category signifies those trees of a low quality and value that are currently in an adequate condition to remain until new planting could be established (A minimum life expectancy of 10yrs is suggested), or young trees with a stem diameter below 150mm. Whilst C category trees will usually not be retained where they would impose a significant constraint on development, young trees with a stem diameter of less than 150mm should be considered for relocation.

The above categories have sub-categories attached to the tree categorisation.
Sub-category 1- Mainly Arboricultural Values eg-A1
Sub-category 2- Mainly Landscape Values- B2
Sub-category 3- Mainly cultural values, including conservation C2

Appendix 1 – Tree Inventory

Tree Inventory Legend

Tree Dimensions - All dimensions are in meters.
Ht - Tree Height
Crown clearance - Lowest canopy height (distance from ground level to the first live branch)
Crown spread - Tree Canopy Spread measured by radii at north, east, south and west
DBH. -Stem diameter at approx. 1.50m from ground level.
RPA - Root Protection Area, as a radius measured from the tree's stem centre.

Physiological Condition
Good - A specimen of generally good form and health
Fair - A specimen with defects or ill health that can be either rectified or managed typically allowing for retention
Poor - A specimen whom through defect, disease attack or reduced vigour has a limited longevity or may be un-safe
Dead - A dead tree

Age Class - Young: A tree, which has been planted in the last 10 years.
Semi -mature A tree that is less than 1/3 the expected height of the species in question.
Early mature: A tree, which is approximately 2/3's the expected height of the species in question.
Mature: A tree that has reached the expected height of the species in question, but still increasing in size.
Over mature: A tree at the end of its life cycle and the crown is starting to break up and decrease in size.

Structural Condition - Information on structural form, defects, damage, injury or disease supported by the tree
PMR (Preliminary Management Recommendations) – refers to Arboricultural actions or works considered necessary at the time of the inspection and relating to the existing site context and tree condition. *Note is also made of works considered as urgent*.

Species Common name is given; botanical name is also given upon its first entry, in Italics.

Appendix 1 **Hayestown Rush, Co. Dublin**

Tree #	Species Botanical Name	Age class	Size (mm)	Height (M)	Crown Sp. (M)	Crown Cl.(M)	Condition	Structural/Physiological Observations	Impact of the development	PMR	Category	R.P.A. Meters
5436	*Acer Pseudoplatanus* Sycamore	M	400	14	N=3 S=3 E=3 W=3	1	Good	A large mature Sycamore displaying over all good condition	Remove to facilitate the development	Remove	B2	
5437	Sycamore	SM	130	6	N=1 S=1 E=1 W=1	2	Fair	A semi-mature Sycamore displaying over all fair condition. This tree has been suppressed by the larger surrounding trees.	Remove to facilitate the development	Remove	C2	
5438	Sycamore	M	260	10	N=2 S=2 E=2 W=2	1	Good	A mature Sycamore displaying over all good condition	Remove to facilitate the development	Remove	B2	
5439	*Crataegus Monogyna* Hawthorn	Y	90	3	N=1 S=1 E=1 W=1	1	Good	A young Hawthorn displaying over all good condition	Remove to facilitate the development	Remove	C2	
5440	Sycamore	M	270	10	N=2 S=2 E=2 W=2	0.5	Good	A mature Sycamore displaying over all good condition	Remove to facilitate the development	Remove	B2	

Appendix 1 **Hayestown Rush, Co. Dublin**

Tree #	Species Botanical Name	Age class	Size (mm)	Height (M)	Crown Sp. (M)	Crown Cl.(M)	Condition	Structural/Physiological Observations	Impact of the development	PMR	Category	R.P.A. Meters
5441	Sycamore	M	270	10	N=2 S=2 E=2 W=2	0.5	Good	A mature Sycamore displaying over all good condition	Unknown	Retain	B2	3.7m
5442	Sycamore	M	350	10	N=2 S=2 E=2 W=2	1	Good	A mature Sycamore displaying over all good condition. Some limbs on the western side have been pruned but this tree still retains good condition	Unknown	Retain	B2	4.5m
5443	Sycamore	M	350	10	N=2 S=2 E=2 W=2	1	Good	A mature Sycamore displaying over all good condition. Some limbs on the eastern side have been pruned but this tree still retains good condition.	Unknown	Retain	B2	4.5m
5444	Sycamore	M	400	10	N=3 S=3 E=3 W=3	1.5	Good	A large mature Sycamore displaying over all good condition	Unknown	Retain	B2	5.0m
Group 1 x 12	*Alnus Incana* Grey Alder	SM	90	5	N=1 S=1 E=1 W=1	1	Good	Represents a group of 12 semi-mature Grey Alder displaying over all good condition. These trees were possibly planted as a screening.	Remove to facilitate the development	Remove	B2	

Appendix 1 **Hayestown Rush, Co. Dublin**

Tree #	Species Botanical Name	Age class	Size (mm)	Height (M)	Crown Sp. (M)	Crown Cl.(M)	Condition	Structural/Physiological Observations	Impact of the development	PMR	Category	R.P.A. Meters
5445	*Pinus Radiata* Monterey Pine	M	600	24	N=4 S=4 E=2 W=2	2	Good	A large mature Monterey Pine displaying over all good condition	Unknown	Retain	A2	7.0m
5446	Monterey Pine	M	600	24	N=4 S=4 E=2 W=2	2	Good	A large mature Monterey Pine displaying over all good condition	Unknown	Retain	A2	7.0m
5447	Monterey Pine	M	600	24	N=4 S=4 E=2 W=2	2	Good	A large mature Monterey Pine displaying over all good condition	Unknown	Retain	A2	7.0m
5448	Monterey Pine	M	600	24	N=4 S=4 E=2 W=2	2	Good	A large mature Monterey Pine displaying over all good condition	Unknown	Retain	A2	7.0m
5449	Monterey Pine	M	600	24	N=4 S=4 E=2 W=2	2	Good	A large mature Monterey Pine displaying over all good condition	Unknown	Retain	A2	7.0m

Appendix 1 **Hayestown Rush, Co. Dublin**

Tree #	Species Botanical Name	Age class	Size (mm)	Height (M)	Crown Sp. (M)	Crown Cl.(M)	Condition	Structural/Physiological Observations	Impact of the development	PMR	Category	R.P.A. Meters
5450	Monterey Pine	M	600	24	N=4 S=4 E=2 W=2	2	Good	A large mature Monterey Pine displaying over all good condition	Unknown	Retain	A2	7.0m
5451	Monterey Pine	M	600	24	N=4 S=4 E=2 W=2	2	Good	A large mature Monterey Pine displaying over all good condition	Unknown	Retain	A2	7.0m
5452	Monterey Pine	M	600	24	N=4 S=4 E=2 W=2	2	Good	A large mature Monterey Pine displaying over all good condition	Unknown	Retain	A2	7.0m
5453	Monterey Pine	M	600	24	N=4 S=4 E=2 W=2	2	Good	A large mature Monterey Pine displaying over all good condition	Unknown	Retain	A2	7.0m
5454	Monterey Pine	M	600	24	N=4 S=4 E=2 W=2	2	Good	A large mature Monterey Pine displaying over all good condition	Unknown	Retain	A2	7.0m

Appendix 1 **Hayestown Rush, Co. Dublin**

Tree #	Species Botanical Name	Age class	Size (mm)	Height (M)	Crown Sp. (M)	Crown Cl.(M)	Condition	Structural/Physiological Observations	Impact of the development	PMR	Category	R.P.A. Meters
5455	Monterey Pine	M	600	24	N=4 S=4 E=2 W=2	2	Good	A large mature Monterey Pine displaying over all good condition	Unknown	Retain	A2	7.0m
5456	Monterey Pine	M	600	24	N=4 S=4 E=2 W=2	2	Good	A large mature Monterey Pine displaying over all good condition	Unknown	Retain	A2	7.0m
5457	Monterey Pine	M	600	24	N=4 S=4 E=2 W=2	2	Good	A large mature Monterey Pine displaying over all good condition	Unknown	Retain	A2	7.0m
5458	Monterey Pine	M	600	24	N=4 S=4 E=2 W=2	2	Good	A large mature Monterey Pine displaying over all good condition	Unknown	Retain	A2	7.0m
5459	Monterey Pine	M	600	24	N=4 S=4 E=2 W=2	2	Good	A large mature Monterey Pine displaying over all good condition	Unknown	Retain	A2	7.0m

Appendix 1 **Hayestown Rush, Co. Dublin**

Tree #	Species Botanical Name	Age class	Size (mm)	Height (M)	Crown Sp. (M)	Crown Cl.(M)	Condition	Structural/Physiological Observations	Impact of the development	PMR	Category	R.P.A. Meters
5460	Monterey Pine	M	600	24	N=4 S=4 E=2 W=2	2	Good	A large mature Monterey Pine displaying over all good condition	Unknown	Retain	A2	7.0m
5461	Monterey Pine	M	600	24	N=4 S=4 E=2 W=2	2	Good	A large mature Monterey Pine displaying over all good condition	Unknown	Retain	A2	7.0m
5462	Monterey Pine	M	600	24	N=4 S=4 E=2 W=2	2	Good	A large mature Monterey Pine displaying over all good condition	Unknown	Retain	A2	7.0m
5463	Monterey Pine	M	600	24	N=4 S=4 E=2 W=2	2	Good	A large mature Monterey Pine displaying over all good condition	Unknown	Retain	A2	7.0m
5464	Monterey Pine	M	600	24	N=4 S=4 E=2 W=2	2	Good	A large mature Monterey Pine displaying over all good condition	Unknown	Retain	A2	7.0m

Appendix 1 **Hayestown Rush, Co. Dublin**

Tree #	Species Botanical Name	Age class	Size (mm)	Height (M)	Crown Sp. (M)	Crown Cl.(M)	Condition	Structural/Physiological Observations	Impact of the development	PMR	Category	R.P.A. Meters
5465	Monterey Pine	M	600	24	N=4 S=4 E=2 W=2	2	Good	A large mature Monterey Pine displaying over all good condition	Unknown	Retain	A2	7.0m
5466	Monterey Pine	M	600	24	N=4 S=4 E=2 W=2	2	Good	A large mature Monterey Pine displaying over all good condition	Unknown	Retain	A2	7.0m
5467	Monterey Pine	M	600	24	N=4 S=4 E=2 W=2	2	Good	A large mature Monterey Pine displaying over all good condition	Unknown	Retain	A2	7.0m
5468	Monterey Pine	M	600	24	N=4 S=4 E=2 W=2	2	Good	A large mature Monterey Pine displaying over all good condition	Unknown	Retain	A2	7.0m
T1	*Alnus Cordata* Italian Alder	M	280	12	N=1 S=1 E=1 W=1	2	Good	A mature Italian Alder displaying over all good condition. The trees on the northern boundary were inaccessible due to the dense overgrowth of 2m high briars. For this reason a virtual tag of 'T' numbers was used.	Remove to facilitate the development	Remove	B2	

Appendix 1 **Hayestown Rush, Co. Dublin**

Tree #	Species Botanical Name	Age class	Size (mm)	Height (M)	Crown Sp. (M)	Crown Cl.(M)	Condition	Structural/Physiological Observations	Impact of the development	PMR	Category	R.P.A. Meters
T2	Italian Alder	M	280	12	N=1 S=1 E=1 W=1	2	Good	A mature Italian Alder displaying over all good condition. The trees on the northern boundary were inaccessible due to the dense overgrowth of 2m high briars. For this reason a virtual tag of 'T' numbers was used.	Remove to facilitate the development	Remove	B2	
T3	*Salix Fragilis* Crack Willow	M	150	10	N=3 S=3 E=3 W=3	1	Good	A mature Crack Willow displaying over all good condition. The trees on the northern boundary were inaccessible due to the dense overgrowth of 2m high briars. For this reason a virtual tag of 'T' numbers was used.	Remove to facilitate the development	Remove	B2	
T4	Sycamore	EM	220	10	N=2 S=2 E=2 W=2	2	Good	An early mature Sycamore displaying over all good condition. The trees on the northern boundary were inaccessible due to the dense overgrowth of 2m high briars. For this reason a virtual tag of 'T' numbers was used.	Remove to facilitate the development	Remove	B2	
T5	Sycamore	EM	220	10	N=2 S=2 E=2 W=2	1	Good	An early mature Sycamore displaying over all good condition. The trees on the northern boundary were inaccessible due to the dense overgrowth of 2m high briars. For this reason a virtual tag of 'T' numbers was used.	Remove to facilitate the development	Remove	B2	
T6	Crack Willow	M	180	12	N=2 S=2 E=2 W=2	1	Good	A mature Crack Willow displaying over all good condition. The trees on the northern boundary were inaccessible due to the dense overgrowth of 2m high briars. For this reason a virtual tag of 'T' numbers was used.	Remove to facilitate the development	Remove	B2	

Appendix 2. Tree Constraints Plan

Appendix 3. **Tree Protection Plan**

This report was prepared by:

Michael Garry, BSc. Arb. Dip Arb M.Arbor, Pgrad Ecology (UCC)

Arbor-Care Ltd, Professional Consulting Tree Service

Yours in Conservation,

Michael Garry.

www.arborcare.ie

Copyright & Non Disclosure Notice

The content of this report are subject to copyright owned by Arbor-Care, this report may not be copied or used without our prior written agreement for any purpose other than the purpose indicated in this report.

Third Party Disclaimer

Any disclosure of this report to a third party is subject to this disclaimer. The report was prepared by Arbor-Care at the instruction of, and for the use by, our client named within the report. This report does not in any way constitute advice to any third party who is able to access it by any means. Arbor-Care excludes to the fullest lawfully permitted all loss liability whatsoever for any loss or damage arising from reliance on the content of this report.