MANHOLE DETAILS FOR PIPE DIAM's.
150, 225, 300, 375, 400 & 450mm.
DEPTH TO INVERT LESS THAN 1.0m

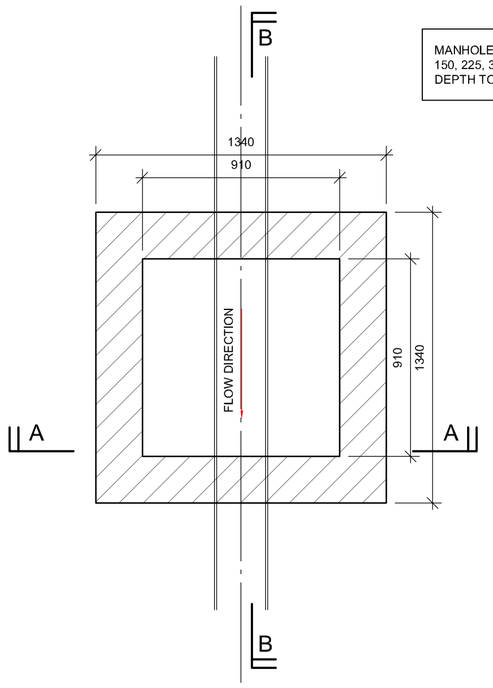

TYPE A MANHOLE
SCALE 1:20

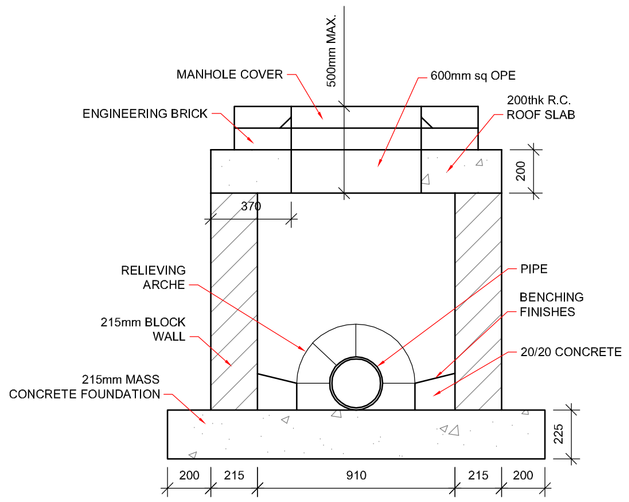

TYPE A SECTION A-A
SCALE 1:20

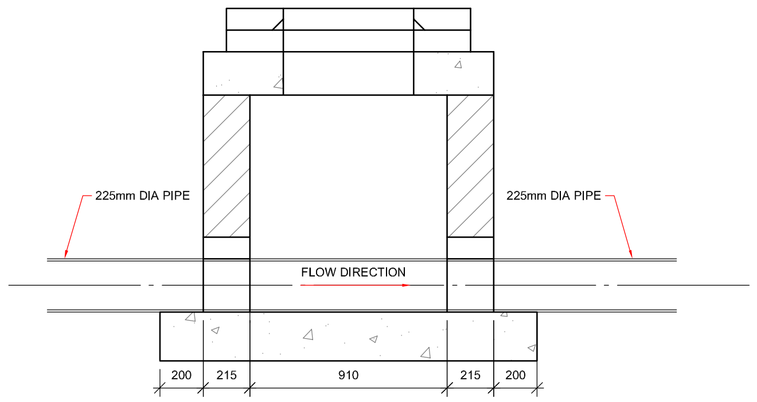

TYPE A SECTION B-B
SCALE 1:20

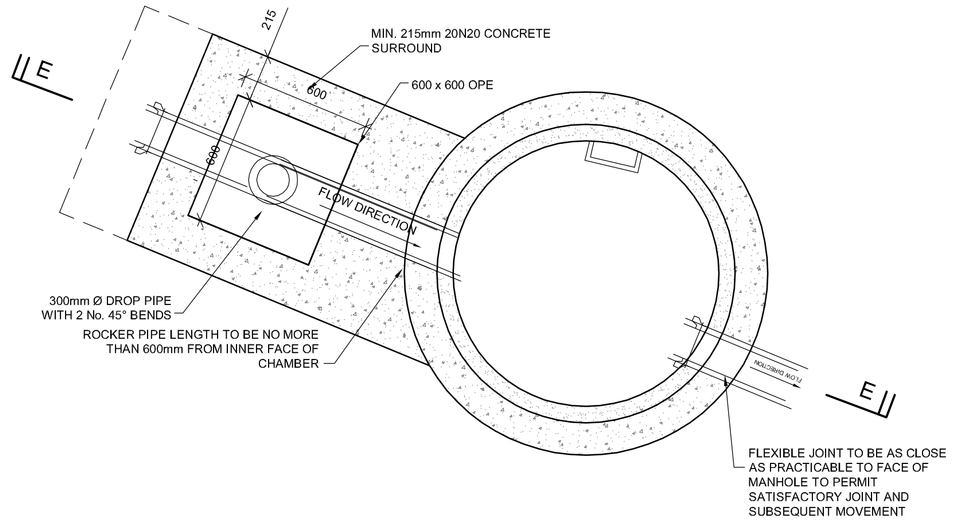

BACKDROP PRECAST MANHOLE
PLAN DETAIL
SCALE 1:20

MANHOLE DETAILS FOR PIPE DIAM's.
225, 300, 375, 400 & 450mm.
DEPTH TO INVERT 1m to 3m

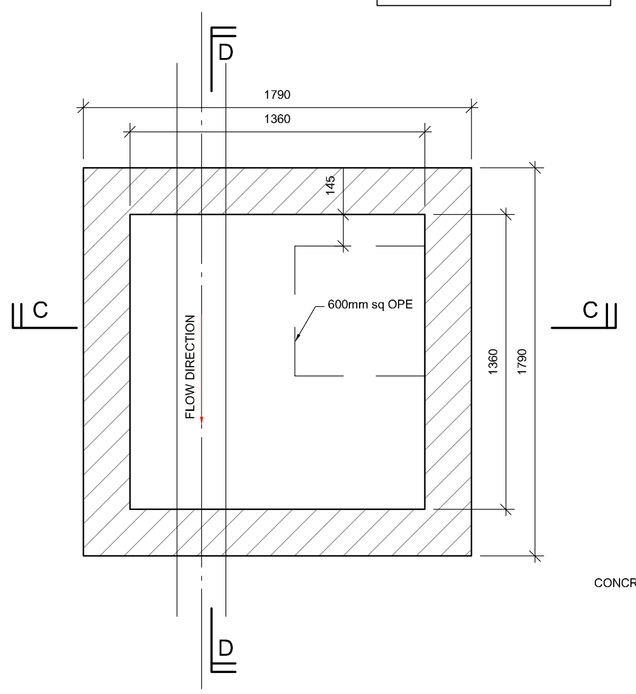

TYPE B MANHOLE
SCALE 1:20

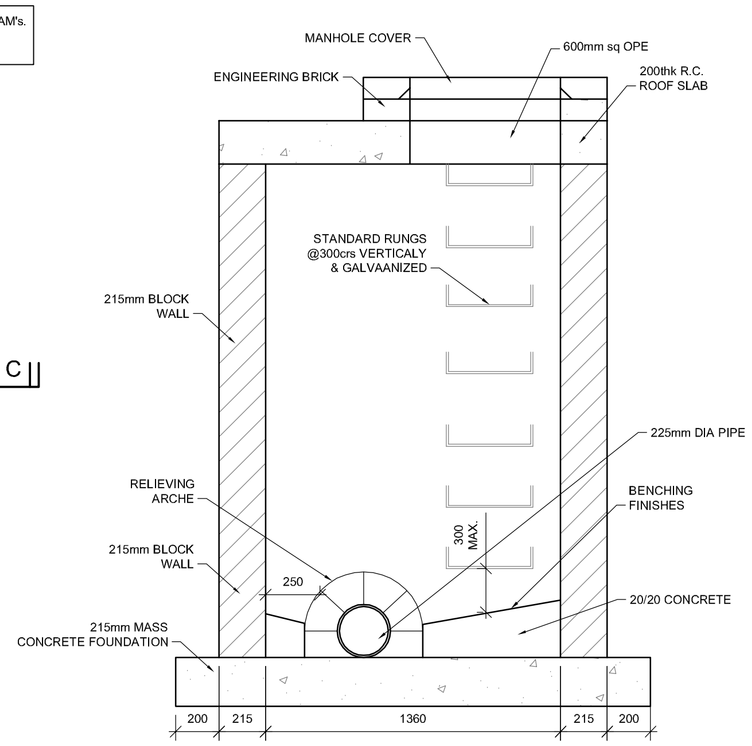

TYPE B SECTION C-C
SCALE 1:20

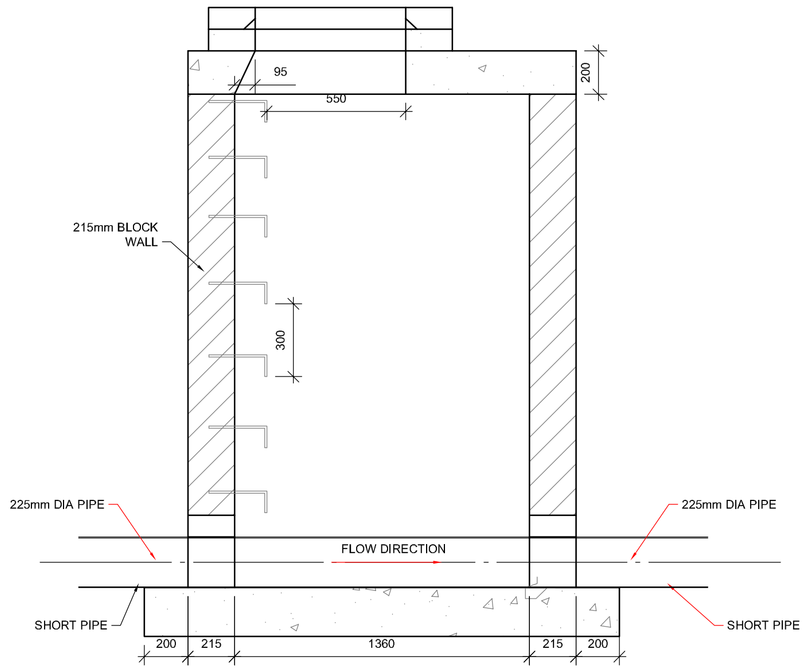

TYPE B SECTION D-D
SCALE 1:20

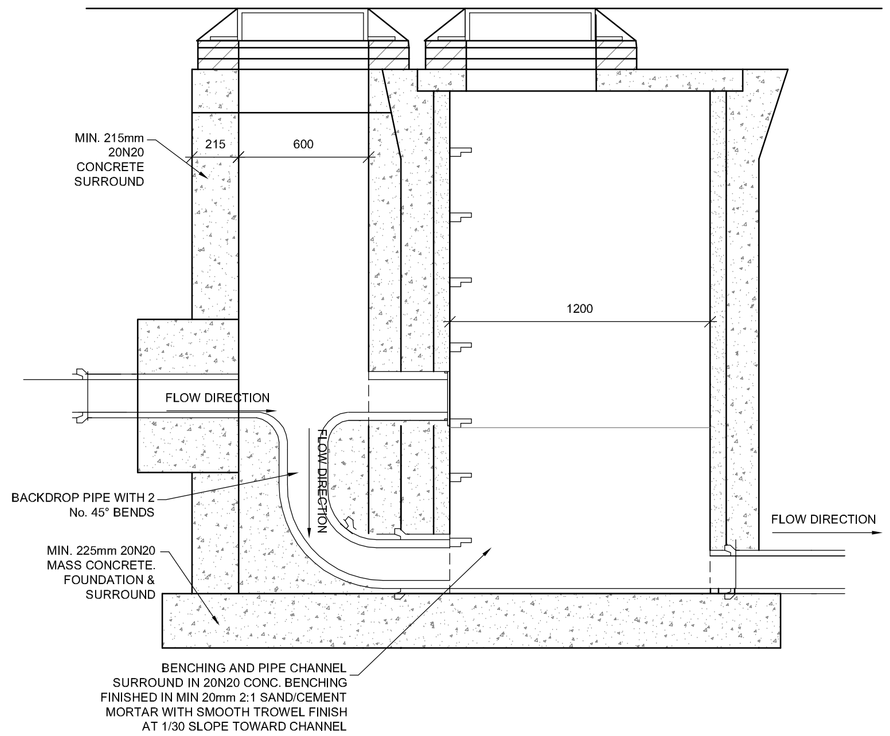

SECTION E-E
SCALE 1:20

Rev	Date	Drn	Chk'd	Description
P1	31/01/20	POC	XX	Issued for Planning

LOHAN & DONNELLY
Consulting Engineers
13 Gardiner Place, Mountjoy Square, Dublin 1. T: 01 8787770
W: www.lohan-donnelly.com E: info@lohan-donnelly.com

Project:	Social Housing, Church Road, Lusk, Co. Dublin
Drawing:	Drainage Details Manhole Details
Model Reference:	19182-LDE-ZZ-ZZ-M2
Drawing Reference:	19182-LDE-ZZ-00-DR-C-1C03

Project No. 19182	Drg. No. C03
Scale @A1	Date Mar 2020
Drawn POC	Rev. P1
Model Rev:	P1
Suitability:	S3